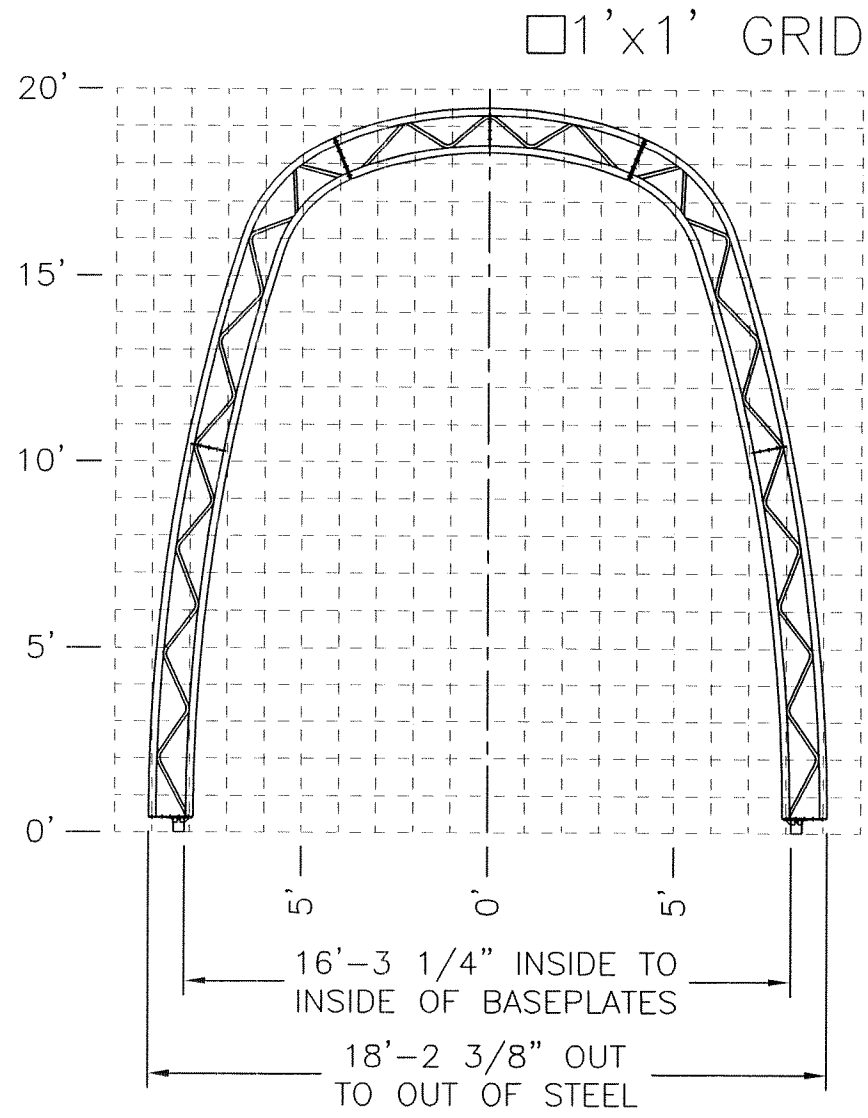

18' LBS

REV.	DESCRIPTION	BY	DATE
1	RELEASED	AB	25 NOV 03

DEALER:

CUSTOMER:

PROJECT:

PROJECT ID: | ORDER ID:

THIS DRAWING IS PROPERTY OF COVER-ALL BUILDING SYSTEMS INC. ANY REPRODUCTION IN WHOLE OR IN PART WITHOUT THE EXPRESSED WRITTEN CONSENT OF COVER-ALL BUILDING SYSTEMS INC. IS PROHIBITED.

DRAWN BY: AB | DATE: 25 NOV 03

CHECKED BY: | DATE: 12 DEC 03

SCALE: NTS

COVER-ALL™ BUILDING SYSTEMS
3815 WANUSKEWIN RD, SASKATOON, SASKATCHEWAN, S7P 1A4
PH: 1-306-657-2888 FAX: 1-306-657-2762
WEBSITE: www.coverall.net, E-MAIL: tech@coverall.net

TITLE: LBS12 18 GRID PROFILE | SHEET | REVISION 1